CML Microcircuits

COMMUNICATION SEMICONDUCTORS

High Resolution

Circuit Diagrams for EV9980

Complementary to CML User Manual: UM9980/8 November 2009

©2009 CML Microcircuits

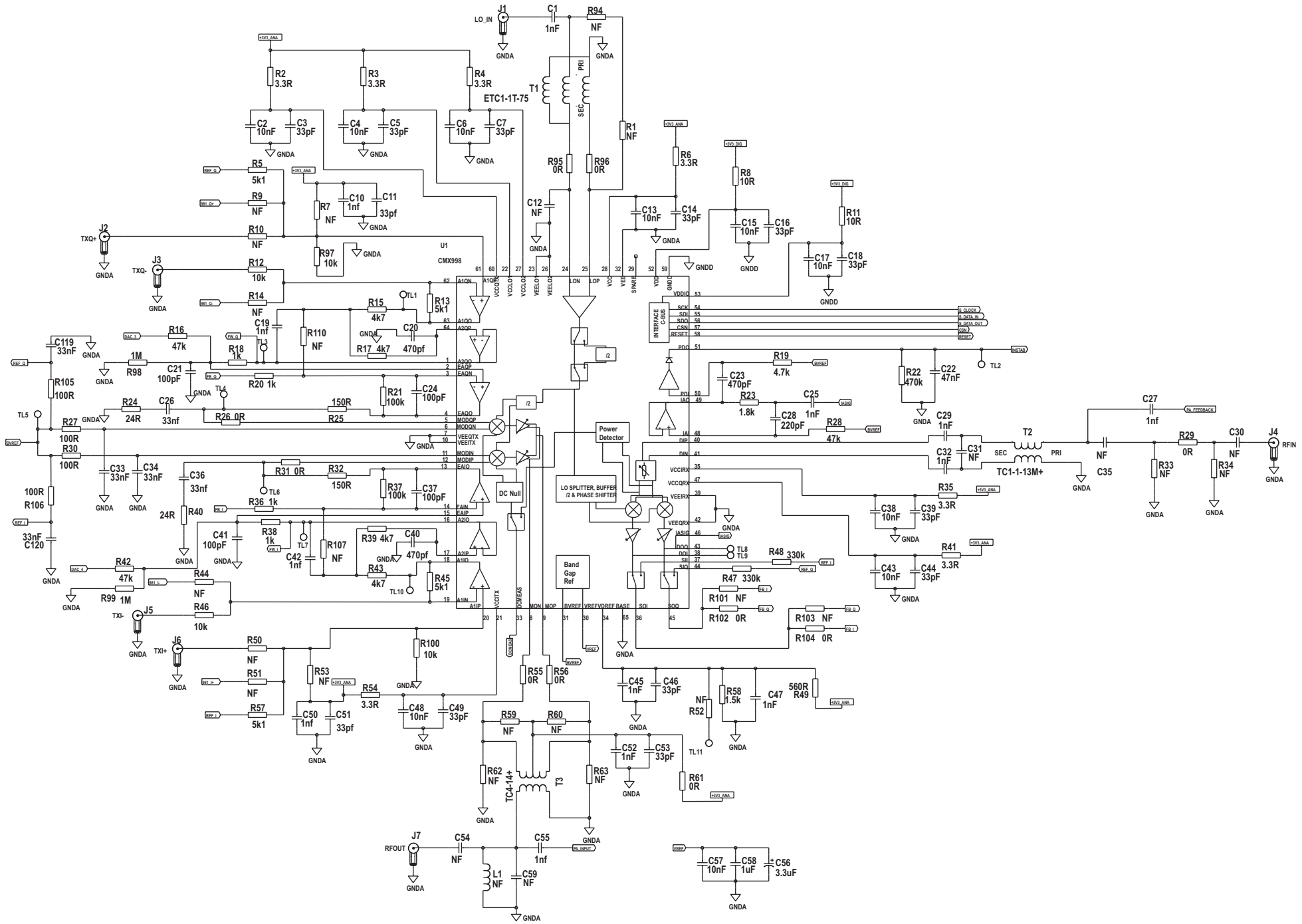

EV9980, Sheet 1

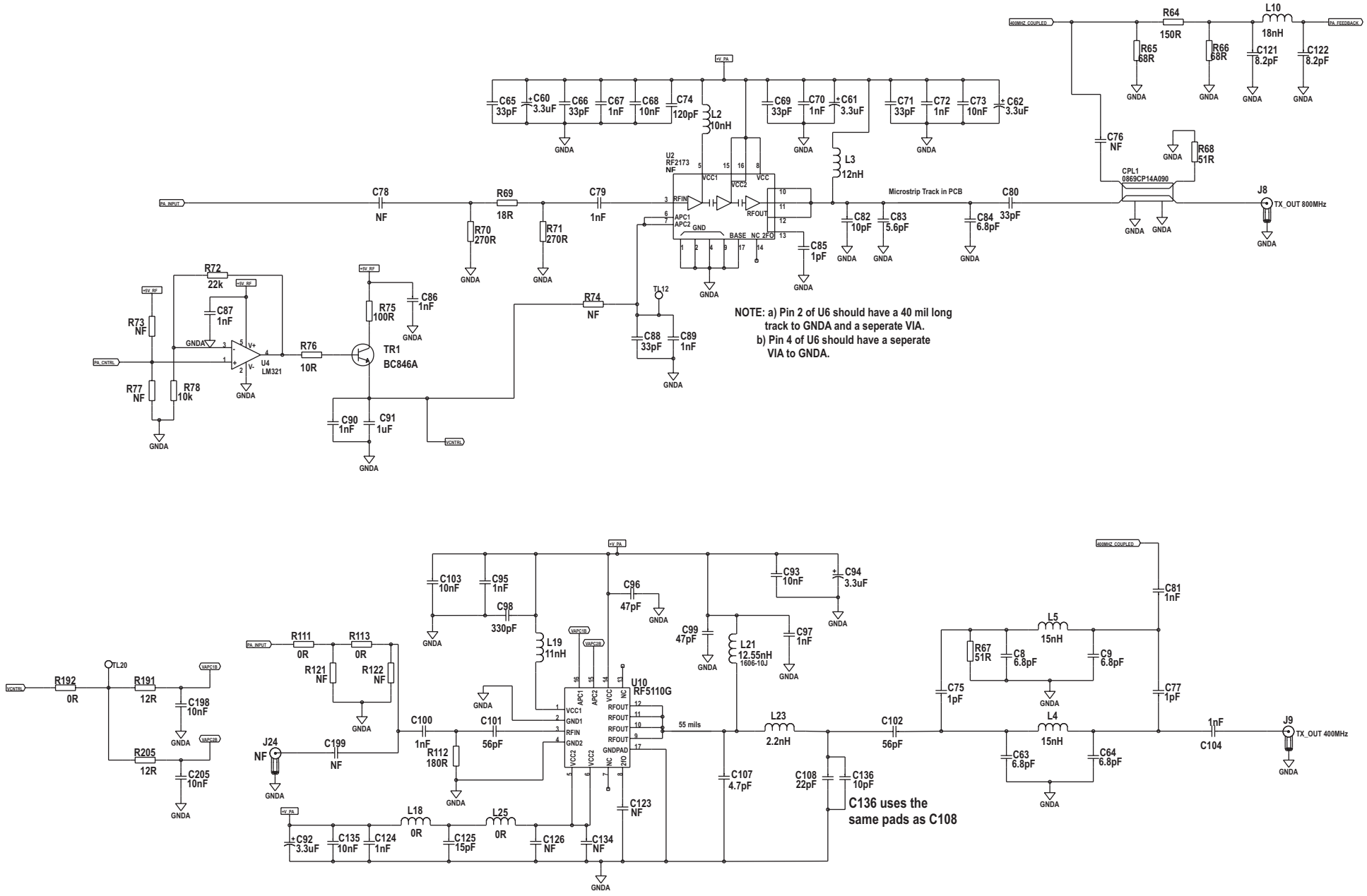

EV9980, Sheet 2

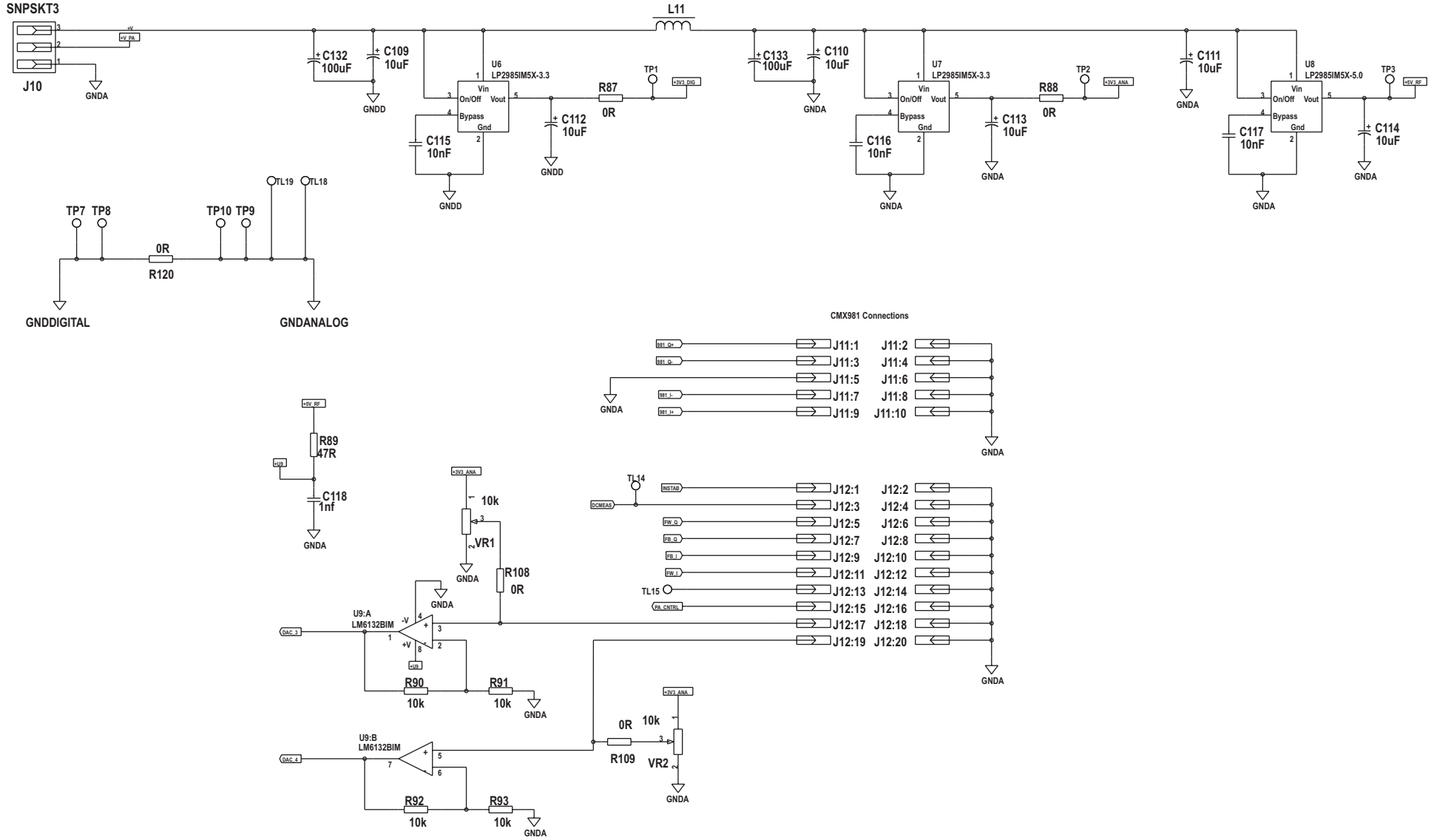
SNPSKT3
J10
+V
+V_PA
GNDA
C132
100uF
C109
10uF
GNDD
U6
LP2985IM5X-3.3
Vin
On/Off
Vout
Bypass
Gnd
C115
10nF
C112
10uF
R87
0R
TP1
+3V3_DIG
L11
C133
100uF
C110
10uF
U7
LP2985IM5X-3.3
C116
10nF
C113
10uF
R88
0R
TP2
+3V3_ANA
C111
10uF
U8
LP2985IM5X-5.0
C117
10nF
C114
10uF
TP3
+5V_RF
TP7
TP8
TP10
TP9
TL19
TL18
0R
R120
GNDDIGITAL
GNDANALOG
CMX981 Connections
981_Q+
981_Q-
981_I-
981_I+
J11:1
J11:2
J11:3
J11:4
J11:5
J11:6
J11:7
J11:8
J11:9
J11:10
+5V_RF
R89
47R
+U9
C118
1nf
+3V3_ANA
10k
VR1
R108
0R
TL14
DCMEAS
INSTAB
FW_Q
FB_Q
FB_I
FW_I
TL15
PA_CNTRL
J12:1
J12:2
J12:3
J12:4
J12:5
J12:6
J12:7
J12:8
J12:9
J12:10
J12:11
J12:12
J12:13
J12:14
J12:15
J12:16
J12:17
J12:18
J12:19
J12:20
U9:A
LM6132BIM
DAC_3
R90
10k
R91
10k
U9:B
LM6132BIM
DAC_4
R92
10k
R93
10k
0R
R109
10k
VR2

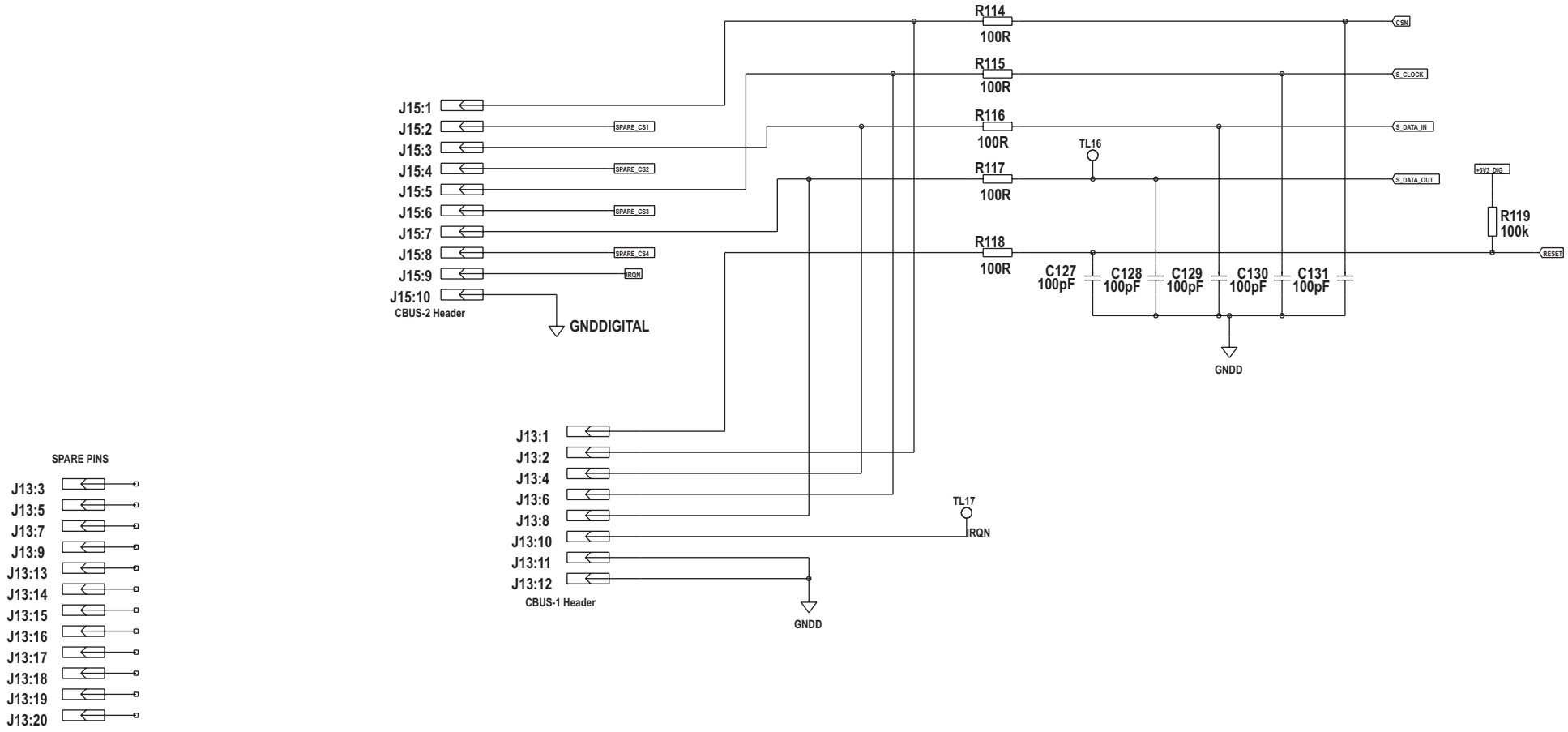
R114
100R
R115
100R
R116
100R
R117
100R
R118
100R
CSN
S_CLOCK
S_DATA_IN
S_DATA_OUT
RESET
+3V3_DIG
R119
100k
TL16
C127
100pF
C128
100pF
C129
100pF
C130
100pF
C131
100pF
GNDD
J15:1
J15:2
J15:3
J15:4
J15:5
J15:6
J15:7
J15:8
J15:9
J15:10
SPARE_CS1
SPARE_CS2
SPARE_CS3
SPARE_CS4
IRQN
CBUS-2 Header
GNDDIGITAL
J13:1
J13:2
J13:4
J13:6
J13:8
J13:10
J13:11
J13:12
CBUS-1 Header
TL17
IRQN
GNDD
SPARE PINS
J13:3
J13:5
J13:7
J13:9
J13:13
J13:14
J13:15
J13:16
J13:17
J13:18
J13:19
J13:20